BLAST-IT-ALL®	BLAST-IT-ALL® LEADING THE INDUSTRY IN SURFACE PREPARATION EQUIPMENT	**HESS MANUFACTURING, INC.** *185 Piper Ln.* *Salisbury, NC 28147* *(800) 535-2612* *LIVE CHAT- www.blast-it-all.com*

STANDARD 6060 CUBE

blast-it-all.com

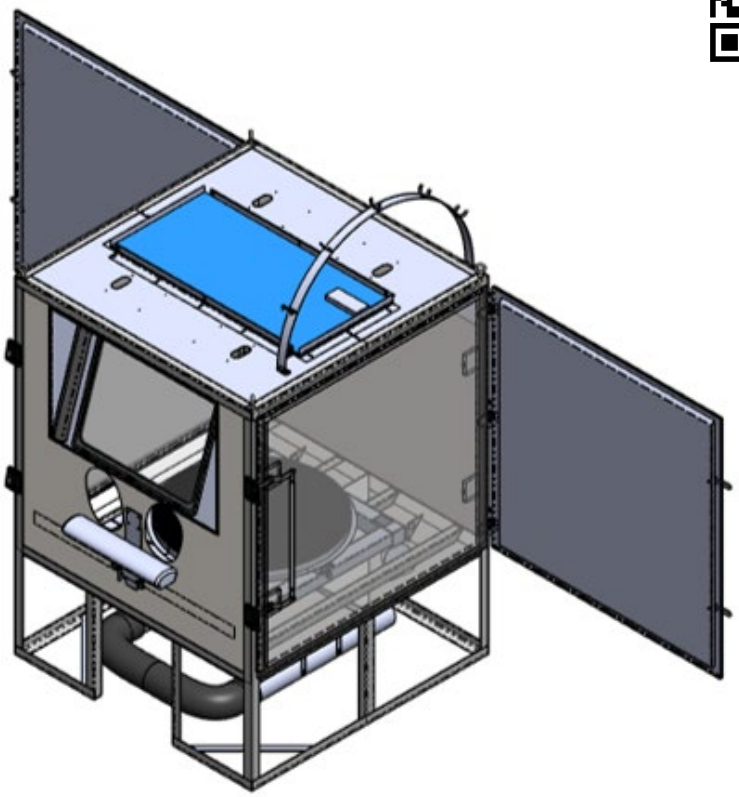

EQUIPMENT MANUAL # MM1051 v01_01

**** WARNING ****

DO NOT USE SAND. SAND WILL CAUSE SILICA DUST, WHICH IS THE CAUSE OF SILICOSIS DISEASE, A CONDITION OF MASSIVE FIBROSIS OF THE LUNGS. THIS STATEMENT INDICATES A POTENTIAL PERSONNEL HAZARD. FAILURE TO COMPLY WITH THESE INSTRUCTIONS MAY RESULT IN PERSONAL INJURY.

Table of Contents

LIST of ILLUSTRATIONS 3

SAFETY 4

OSHA FACT SHEET 6

INSTALATION : 10

6060-54P CUBE 10

PRESSURE POT/RECLAIMER 11

OPERATION 13

6060-54P CUBE 13

TROUBLSHOOTING 15

MAINTENANCE 16

PRESSURE BLAST DATA 31

PRESSURE BLAST DATA 32

WARRANTY 33

LIST of ILLUSTRATIONS

DESCRIPTION	DWG NO
General Arrangement.....	PD2315
General Arrangement Parts List.....	PD2315PL
Machine Ass'y.....	B6788
24" x 30" Window Assy.....	B6690
Ergo Armrest, 24".....	UWA861B
2" x 4" LED Light Assy.....	B346
LED Light Literature.....	
6060-54 Swing Door.....	B6719
Reclaimer.....	A36066
Trash Screen Assy.....	A673-A
Blast Hose Top Support.....	MWA698B
Electrical Schematic.....	B5102-M

SAFETY

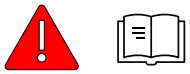	*** READ ENTIRE MANUAL BEFORE INSTALATION/OPERATING EQUIPMENT ***
	1. **DO NOT USE SAND** SAND WILL CAUSE SILICA DUST, WHICH IS THE CAUSE OF **SILICOSIS DISEASE**, A CONDITION OF MASSIVE FIBROSIS OF THE LUNGS. THIS STATEMENT INDICATES A POTENTIAL PERSONNEL HAZARD. FAILURE TO COMPLY WITH THESE INSTRUCTIONS MAY RESULT IN PERSONAL INJURY.
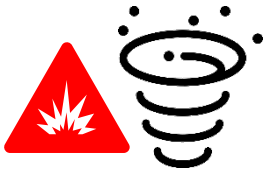	2. **(COLLECTED DUST)** THE **CUSTOMER** (END USER) ASSUMES THE **RESPONSIBILITY** FOR CONTACTING THEIR INSURANCE UNDERWRITER AND ADVISING HESS MANUFACTURING, INC. IN REGARD TO SPECIFIC APPLICATION REQUIREMENTS OF EXPLOSION VENTING OR IF ADDITIONAL FIRE PROTECTION AND SAFETY EQUIPMENT MAY BE REQUIRED. THE BUYER (END USER) IS ALSO CAUTIONED TO ADHERE TO PRESCRIBED OSHA, NFPA, FEDERAL, STATE, AND LOCAL CODES AND REGULATIONS APPLICABLE TO INDUSTRIAL VENTILATION SYSTEMS, WHICH HESS MANUFACTURING, INC. EQUIPMENT MAY BE APPLIED ON.
	3. HEARING PROTECTION IS RECOMMENDED WHILE OPERATING MACHINE
	4. EYE PROTECTION IS RECOMMENDED WHILE OPERATING MACHINE
	5. PROTECTIVE FOOTWEAR IS RECOMMENDED WHILE OPERATING MACHINE
	6. Machine MUST be properly Grounded

		7. Use CAUTION when interacting with any Electrical Components. You MUST incorporate Lock Out / Tag Out Procedures Prior to Servicing Equipment.
		8. Gun MUST ALWAYS be pointed away from the Operator and Towards the item being processed.
		9. NEVER Blast with ANY Doors OPEN. NO ONE Should be in Front of the Operating Station at the Front of the Blast Cabinet while Loading or Unloading Parts. DO NOT OPEN ANY DOOR WHILE THE MACHINE IS IN OPERATION
		10. **DO NOT** CONNECT TO HIGH PRESSURE BOTTLE GAS, RUPTURE AND/OR EXPLOSION CAN OCCUR.

OSHA® FactSheet

Protecting Workers from the Hazards of Abrasive Blasting Materials

Abrasive blasting uses compressed air or water to direct a high velocity stream of an abrasive material to clean an object or surface, remove burrs, apply a texture, or prepare a surface for the application of paint or other type of coating. Employers must protect workers from hazardous dust levels and toxic metals that may be generated from both the blasting material and the underlying substrate and coatings being blasted. This fact sheet provides information on abrasive blasting material, health hazards, and methods to protect workers.

Abrasive Blasting Materials

The decision to use a certain type of abrasive material can depend on factors such as cost, job specifications, environment, and worker health.

Commonly used abrasive materials:

- Silica sand (crystalline)
- Coal slag
- Garnet sand
- Nickel slag
- Copper slag
- Glass (beads or crushed)
- Steel shot
- Steel grit
- Specular hematite (iron ore)

Alternative, less toxic blasting materials include:

- Ice cubes
- Dry ice
- Plastic bead media
- Sponge
- Sodium bicarbonate (baking soda)
- Ground walnut shells, ground corn cob and other biodegradable materials
- High pressure water

Abrasive blasting creates high levels of dust. Photo courtesy of NIOSH.

****** CAUTION ******

Abrasive blasting creates high levels of noise that can cause substantial hearing loss. Always wear hearing protection. Employers must administer a hearing conservation program as required by the OSHA Occupational Noise standard.

Health Hazards

Abrasive blasting operations can create high levels of dust and noise. Abrasive material and the surface being blasted may contain toxic materials (e.g., lead paint, silica) that are hazardous to workers.

- Silica sand (crystalline) can cause silicosis, lung cancer, and breathing problems in exposed workers.
- Coal slag and garnet sand may cause lung damage similar to silica sand (based on preliminary animal testing).
- Copper slag, nickel slag, and glass (crushed or beads) also have the potential to cause lung damage.
- Steel grit and shot have less potential to cause lung damage.
- Slags can contain trace amounts of toxic metals such as arsenic, beryllium, and cadmium.

How to Protect Workers from Exposure to Abrasive Blasting Materials

Each abrasive blasting operation is unique, involving different surfaces, coatings, blast material, and working conditions. Before beginning work, employers should identify the hazards and assign a knowledgeable person trained to recognize hazards and with the authority to quickly take corrective action to eliminate them. Use engineering and administrative controls, personal protective equipment (PPE), including respiratory protection, and training to protect workers involved in abrasive blasting activities. Engineering controls, such as substitution, isolation, containment, and ventilation are the primary means of preventing or reducing exposures to airborne hazards during abrasive blasting operations. Administrative controls, including the use of good work and personal hygiene practices, can also reduce exposure. When engineering and administrative controls cannot keep exposures to hazardous materials below OSHA permissible exposure limits, respiratory protection must be used.

Abrasive blasting using a dust collection system with multiple exhaust ducts. (Photo courtesy of Flexaust, Inc. This equipment is shown for illustrative purposes only and is not intended as an endorsement by OSHA of this company, its products or services.)

Engineering Controls

1. Substitution

- Use a less toxic abrasive blasting material.
- Use abrasives that can be delivered with water (slurry) to reduce dust.

2. Isolation and Containment

- Use barriers and curtain walls to isolate the blasting operation from other workers.
- Use blast rooms or blast cabinets for smaller operations.
- Use restricted areas for non-enclosed blasting operations.
- Keep coworkers away from the blaster.

3. Ventilation

- Use exhaust ventilation systems in containment structures to capture dust.

Employers can use OSHA's free On-site Consultation Program for advice on safety and health issues.

Administrative Controls

Perform routine cleanup using wet methods or HEPA filtered vacuuming to minimize the accumulation of toxic dusts.

- Do not use compressed air to clean as this will create dust in the air.
- Clean and decontaminate tarps and other equipment on the worksite.
- Schedule blasting when the least number of workers are at the site.
- Avoid blasting in windy conditions to prevent the spread of any hazardous materials.

Personal Hygiene Practices

- Prohibit eating, drinking, or using tobacco products in blasting areas.
- Provide wash stations so workers can wash their hands and face routinely and before eating, drinking, or smoking.
- Vacuum or remove contaminated work clothes before eating, drinking or smoking.

- Provide accommodations for end-of-shift showers and change areas with separate storage facilities for street clothes, protective clothing and equipment.
- Keep contaminated clothing and equipment out of the clean change area.

Respiratory Protection

An abrasive-blasting respirator must cover the wearer's head, neck, and shoulders to protect the wearer from rebounding abrasive. Workers must use only respirators approved by NIOSH to provide protection from dusts produced during abrasive-blasting operations.

- Type CE NIOSH-certified blasting airline respirator with positive pressure blasting helmet.

Support personnel involved in cleanup and other related activities may also need respiratory protection.

When respirators are used, employers must establish a comprehensive respiratory protection program as required by the OSHA Respiratory Protection standard (29 CFR 1910.134).

Personal Protective Equipment

- Hearing protection
- Eye and face protection
- Helmet
- Leather gloves that protect to full forearm and aprons (or coveralls)
- Safety shoes or boots

Worker Training and Hazard Communication

- Provide training to abrasive blasters and support personnel on blasting health and safety hazards, how to use controls, personal hygiene practices, safe work practices and the use of PPE and respirators.
- Manufacturers are required to include appropriate health hazard information on the blasting materials on safety data sheets (SDS) as required under OSHA's Hazard Communication standard (29 CFR 1910.1200).
- Obtain and read the manufacturer's SDS for health hazard information on the abrasive blasting material you are using.

For more information on abrasive blasting and control measures see: OSHA's guidance document: "Abrasive Blasting Hazards in Shipyard Employment" (2006); and eTool: Mechanical Removers (Ship Repair).

Disclaimer: This OSHA Fact Sheet provides a general overview of the requirements in OSHA standards related to abrasive blasting. It does not alter or determine compliance responsibilities in these standards or the Occupational Safety and Health Act of 1970. *Since interpretations and enforcement policy may change over time, the reader should consult current OSHA interpretations and decisions by the Occupational Safety and Health Review Commission and the courts for additional guidance on OSHA compliance requirements.*

This is one in a series of informational fact sheets highlighting OSHA programs, policies or standards. It does not impose any new compliance requirements. For a comprehensive list of compliance requirements of OSHA standards or regulations, refer to Title 29 of the Code of Federal Regulations. This information will be made available to sensory-impaired individuals upon request. The voice phone is (202) 693-1999; teletypewriter (TTY) number: (877) 889-5627.

For assistance, contact us. We can help. It's confidential.

OSHA® Occupational Safety and Health Administration

www.osha.gov (800) 321-OSHA (6742)

U.S. Department of Labor

DSG FS-3697 09/2014

Applicable OSHA Standards and Safety and Health Topic Pages

The following table provides links to several OSHA standards (not all-inclusive) that may contain requirements that apply to abrasive blasting operations. For example, the removal of lead paint by abrasive blasting will likely require employers to follow provisions of the OSHA Lead standard. Safety and health topic pages listed here provide employers and workers with information that may be useful for safely conducting abrasive blasting.

General Industry	Shipyard Industry	Construction Industry	OSHA Topics Page(s)
1910.94, Ventilation	1915.33 & 1915.34, Chemical & Mechanical paint removers Ventilation (as it applies to shipyard employment, 1910.94) 1915.13, Cleaning and other cold work	1926.57, Ventilation	Ventilation
1910.95, Occupational noise exposure	1910.95, Occupational noise exposure (as per Shipyard "Tool Bag" Directive, CPL 02-00-182)	1926.52, Occupational noise exposure 1926.101, Hearing Protection	Noise
1910.132, Personal Protective Equipment	1915 Subpart I, Personal Protective Equipment	1926 Subpart E, Personal Protective Equipment	Personal Protective Equipment
Respiratory Protection (1910.134)	1915.154, Respiratory Protection refers to (1910.134)	1926.103, Respiratory Protection (refers to 1910.134)	Respiratory Protection
1910.141, Sanitation	1915.88, Sanitation	1926.51, Sanitation	
1910.1000, Air contaminants Table Z-1, Limits for air contaminants Table Z-2, Toxic and Hazardous Substances Table Z-3, Mineral dusts	1915.1000, Air contaminants Table Z – Shipyards	1926.55, Gases,vapors, fumes, dusts, and mists Appendix A, Threshold limit values of airborne contaminants for construction	Permissible Exposure Limits (PELs) & Hazardous and Toxic Substances
Beryllium See 1910.1000, Table Z-1 for air contaminants	Beryllium See 1915.1000, Table Z	Beryllium See Table 1926.55, Appendix A	Beryllium
Silica See 1910.1000, Table Z-3	Silica See 1915.1000, Table Z	Silica See 1926.55, Appendix A	Silica
1910.1018, Inorganic Arsenic	1915.1018, Inorganic Arsenic	1926.1118, Inorganic Arsenic	Arsenic
1910.1025, Lead	1915.1025, Lead	1926.62, Lead	Lead (General Industry) Lead (Construction)
1910.1026, Chromium(VI)	1915.1026, Chromium(VI)	1926.1126, Chromium(VI)	Hexavalent Chromium
1910.1027, Cadmium	1915.1027, Cadmium	1926.1127, Cadmium	Cadmium
1910.1200, Hazard Communication	1915.1200, Hazard Communication (refers to 1910.1200)	1926.59, Hazard Communication (refers to 1910.1200)	Hazard Communication

INSTALATION :

6060-54P CUBE

	*** READ BEFORE OPERATING EQUIPMENT ***
	1. Remove all shipping protection Check for any concealed shipping damage, if discovered, report the damage to your freight carrier AS Non-Disclosed Hidden Damage immediately.
	2. Locate components per plan view and component DRAWINGS, away from any water or moist environment. If moist compressed air is present at this location, install a good moisture separator.
	3. Connect Compressed Air Line to the INLET Air Filter at the Rear of the Cabinet
	4. Wire ALL Connections from the Cabinet to the Control Panel. Connect Electrical Service to the Control panel
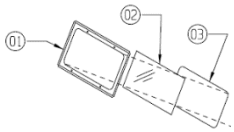	5. Remove Window Frame / Window Glass and Install Mylar Roll into the Mylar Dispenser. Pull the Mylar Across the Window Opening. Place the Window Glass / Window Frame on Top of the Mylar and Secure with the Plastic Knobs.
	6. Install Dust Collector Run Wiring from Dust Collector Motor to 3 Phase Control Box Run Wiring from Pulse Control Board to 3 Phase Control Box Use Machine Electrical Schematic for Reference
	7. Install Snap-In Gloves (Watch the Video)

INSTALATION :

PRESSURE POT/RECLAIMER

	*** READ BEFORE OPERATING EQUIPMENT ***
	1. Remove all shipping protection Check for any concealed shipping damage, if discovered, report the damage to your freight carrier AS Non-Disclosed Hidden Damage immediately.
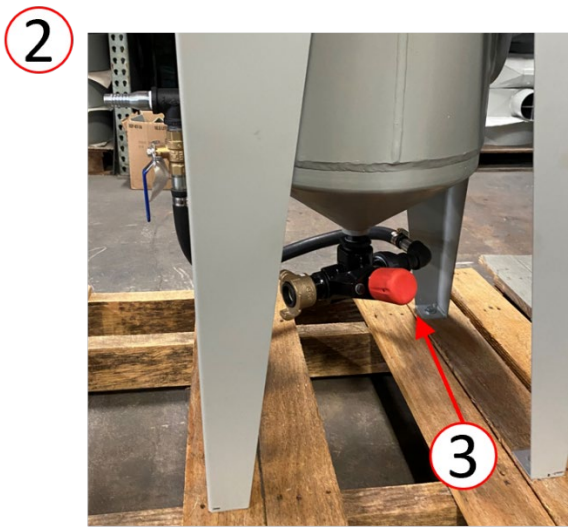	2. Place Pressure Pot/Reclaimer in the Desired Location per Plan Drawing 3. Anchor Pressure Pot /Reclaimer Legs to Floor

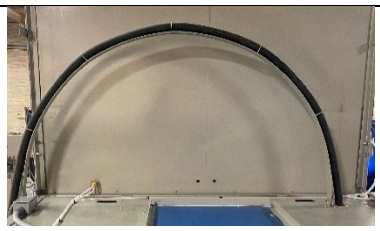

4

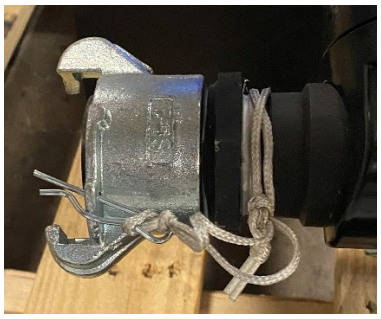

5

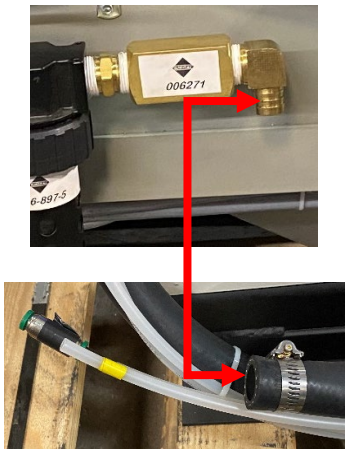

6

7

4. Attach Blast Hose Top Support to the Top of the Machine. Pull Media Hose from The Top of Machine, Threading it though the Top Support.

5. Attach ½" Media Hose to Media Outlet Valve of the Pressure Pot. Twist on Fitting and PIN

6. Attach Pressure Pot Air Supply Line to Air Stream.

7. Attach ¼" Air Lines from the Pressure Pot to the Pipe Stream

   - Attach Flex Hose from the Reclaimer to the Dust Collector

OPERATION

6060-54P CUBE

	***** READ BEFORE OPERATING EQUIPMENT *****

	1. Preparing Parts for Blasting : All parts to be processed must be free of oil, grease, and moisture. Make sure parts are dry before putting into cabinet for processing.
	2. Air Pressure : Set air pressure at 40 ~ 80 PSI. Pressure Required will Depend on Media Used and Substrate. Designated parts to be processed, start at lower pressure, and work up the PSI scale to obtain desired finish. **DO NOT** CONNECT TO HIGH PRESSURE BOTTLE GAS, RUPTURE AND EXPLOSION CAN OCCUR.
	**3. Gun Angle and Distance:** Direct blast at part with an approximate (45-60) degree angle with ricochet toward the Center of the Turntable. Do not hold at 90 degree to part being processed. This will cause the media to blast to bounce back into the blast stream and slow blasting action. Also 90-degree angle will cause excessive wear on gun and viewing window. Hold gun approximately 6 inches from part being cleaned. GUN MUST ALWAYS BE POINTED AWAY FROM THE OPERATOR AND TOWARD ITEM BEING PROCESSED. NEVER BLAST WITH ANY OF THE CABINET DOORS OPEN. WHILE LOADING AND UNLOADING, NO ONE SHOULD BE AT THE OPERATOR STATION AT FRONT OF THE BLAST CABINET.
	4. Media should be good quality and dry. Damp media will cause the media not to flow and will clog abrasive flow. Media Available *@ Blast-It-All Online Store* IF YOU ARE HAVING A PROBLEM SELECTING MEDIA FOR A SPECIFIED JOB, CONTACT YOUR DISTRIBUTOR FOR THEIR RECOMMENDATIONS

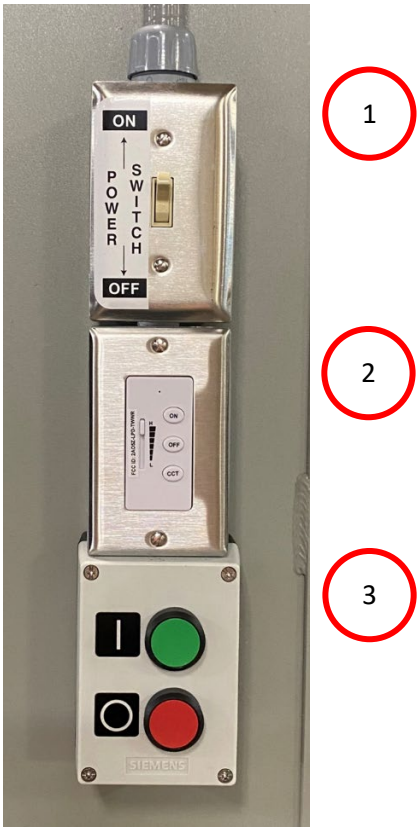

1

2

3

1. Cut Light Switch ON
2. Adjust Light Level using the Dimmer Switch
3. Press Green Start Button to Activate the Dust Collector
4. Open Door
5. Load Parts on Turntable
6. Close Door
7. Blast Parts to Desired Condition
8. Unload Parts

TROUBLSHOOTING

	1. **Caking of Media :** A. Media caking is caused by moisture in compressed air supply or oily and greasy parts. If this is not corrected, media will not flow and will clog gun. Check air supply. If water or moisture is present, install a good moisture trap. If oily or greasy parts are being blast treated, you should first degrease and dry parts. B. If blast gun should occasionally clog, tightly seal the front of the nozzle against the inside front the blast cabinet and push foot valve down 3 to 4 seconds. This will cause the system to back blast through the gun and media hose and clear the media hose.
	2. **Gun Air Pressure Drop :** Set air regulator at **80 PSI** on air gauge. Push foot valve and if gauge reading should drop, check the air supply pipe or hose. A restriction in the supply line such as reducers or quick couplers will cause pressure drop. Also, if the blast cabinet is too far from the air compressor, a pressure drop can occur. We recommend 1/2" - 1" I.D. air supply line. The bigger the better.
	3. **Poor Visibility - Excessive Dust :** A. Cabinet Air inlet blocked, check for blockage. B. Dust collector sump full and needs emptied. C. Cartridge contaminated. Verify Pulse Operation. D. Media breakdown - replace media and clean dust collector.
	4. **Poor Media Flow :** A. Wet or damp media caused from moisture or oil in compressed air line. Use dry air or install a moisture filter. B. Replace media and clean media sump and hose. C. Media level should be below media screen. D. Hole in media hose from wear, replace hose assembly. E. Poor Air Flow/CFM F. Worn Gun Body, Nozzle or Orifice

MAINTENANCE

1. BEFORE EACH USE :

- Check Moisture Trap and Drain if Needed
- Visually Inspect Machine for Unsafe Conditions
- Turn on Compressed Air Supply
- Turn on Electrical Supply

2. AFTER EACH USE :

- Turn Off Electrical Supply
- Turn Off Compressed Air Supply
- Drain Moisture Trap/s

3. DAILY INPECTION :

- Clean Trash Screen in Reclaimer
- Empty Dust Container for Dust Collector
- Check Nozzles for Wear

4. Weekly Inspection :

- Check Nozzles for Wear
- Check Machine Door Gaskets for Wear
- Check Reclaimer Door Gasket for Wear
- Check Flex Hoses for Soft Spots

5. AS NEEDED :

- Add Media
- Replace any Worn Parts

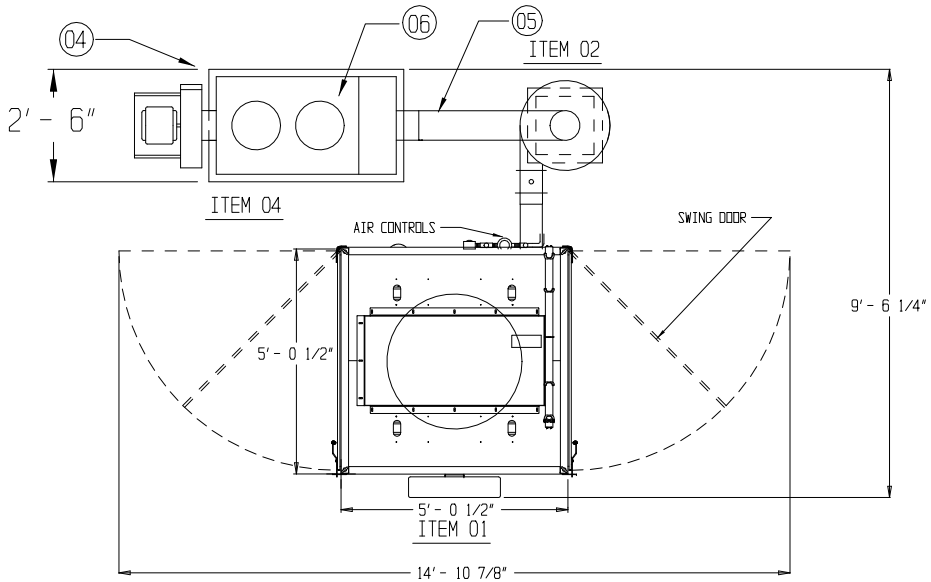

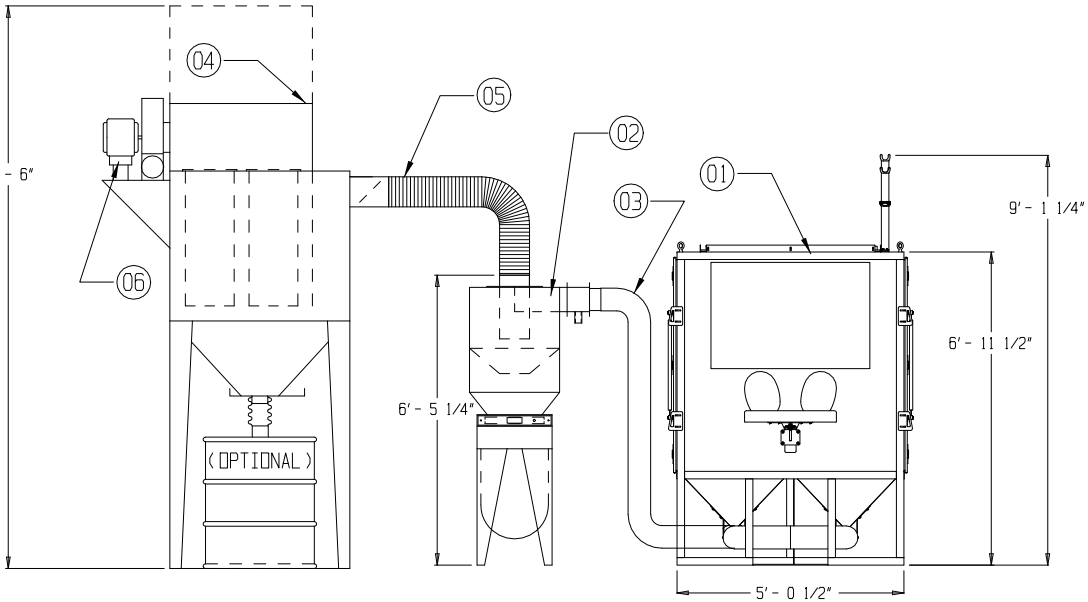

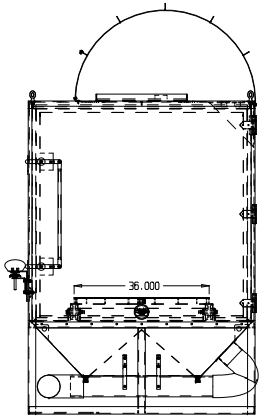

BILL OF MATERIAL

ITEM	QTY	DESCRIPTION	PART NO.	REV
01	1	6060-54 CUBE		
02	1	RECLAIMER, 24" DIA.		
03	1	FLEX HOSE, MACHINE TO RECLAIMER		
04	1	DUST COLLECTOR (RPJ-2H CARTRIDGE TYPE)		
05	1	FLEX HOSE, RECLAIMER TO DUST COLLECTOR		
06	1	36"Ø TURNTALBE (1000 LBS. SET-IN)		
99	1	MANUAL		

HESS MANUFACTURING, INC.
SALISBURY NORTH CAROLINA

6060-54 CUBE | QUOTE NO. | DWG. NO. P02315

DESIGN CRITERIA

EXHAUST FAN

CFM - 900
SP -
BHP -
MOTOR - 2 HP

SOUND POWER DB RE 10-12 WATTS
OCTAVE BAND

1	2	3	4	5	6	7	8

dbA @

RECLAIM BOOSTER FAN

SOUND POWER DB RE 10-12 WATTS
OCTAVE BAND

1	2	3	4	5	6	7	8

dbA @

DUST COLLECTOR

MODEL - RPJ-2H-DC
TYPE - CARTRIDGE
NO. CARTRIDGES (2)

RECLAIMER

TYPE - CYCLONE
DIAMETER - 24"
HOPPER SIZE -
AIR WASH - ADJUSTABLE
TRASH SCREEN

PRESSURE SYSTEM

PRESSURE VESSEL -- 1.0 CU. FT

ELECTRICAL

POWER - 480V / 3 PH / 60 HZ
CONTROLS - 120V / 1 PH / 60 HZ

SIGNATURE APPROVAL: _____

DATE: _____

***PLEASE RETURN SIGNED COPY**

NO.	DATE	BY	REVISION

TOLERANCE	SCALE: 1/16" = 1"
FRACTIONAL	DATE 06/14/23
	DRAWN BY DEC
DECIMAL	CHECKED BY
	APPROVED BY
UNLESS NOTED OTHERWISE	PROP. NO.

INSTALLATION | CUSTOMER | ENGINEER

HESS MANUFACTURING, INC.
SALISBURY NORTH CAROLINA

6060-54 CUBE | QUOTE NO. | DWG. NO. P02315

BILL OF MATERIAL

ITEM	QTY	DESCRIPTION	PART NO.	REV
01	1	6060-54 CUBE		
02	1	RECLAIMER, 24" DIA.		
03	1	FLEX HOSE, MACHINE TO RECLAIMER		
04	1	DUST COLLECTOR (RPJ-2H CARTRIDGE TYPE)		
05	1	FLEX HOSE, RECLAIMER TO DUST COLLECTOR		
06	1	36"Ø TURNTALBE (1000 LBS. SET-IN)		
99	1	MANUAL		

HESS MANUFACTURING, INC.

SALISBURY NORTH CAROLINA

6060-54 CUBE	QUOTE NO.
	DWG. NO. PD2315

DESIGN CRITERIA

EXHAUST FAN

CFM - 900
SP -
BHP -
MOTOR - 2 HP

SOUND POWER DB RE 10-12 WATTS

OCTAVE BAND							
1	2	3	4	5	6	7	8

dbA @

RECLAIM BOOSTER FAN

SOUND POWER DB RE 10-12 WATTS

OCTAVE BAND							
1	2	3	4	5	6	7	8

dbA @

DUST COLLECTOR

MODEL - RPJ-2H-DC
TYPE - CARTRIDGE
NO. CARTRIDGES (2)

RECLAIMER

TYPE - CYCLONE
DIAMETER - 24"
HOPPER SIZE -
AIR WASH - ADJUSTABLE
TRASH SCREEN

PRESSURE SYSTEM

PRESSURE VESSEL -- 1.0 CU. FT

ELECTRICAL

POWER - 480V / 3 PH / 60 HZ
CONTROLS - 120V / 1 PH / 60 HZ

--B6788

C:\Users\Todd Shue\Documents\TODD\SW_PARTS\6060-54 CUBE\6060 CUBE STD\B6788 -BASIC 6060 CUBE ASSY
LAST SAVED: Friday, December 8, 2023 10:05:39 AM

MODIFICATIONS:				
ZONE:	REV:	DESCRIPTION:	DATE:	BY :
	A	INITIAL RELEASE	4/17/2023	MTS

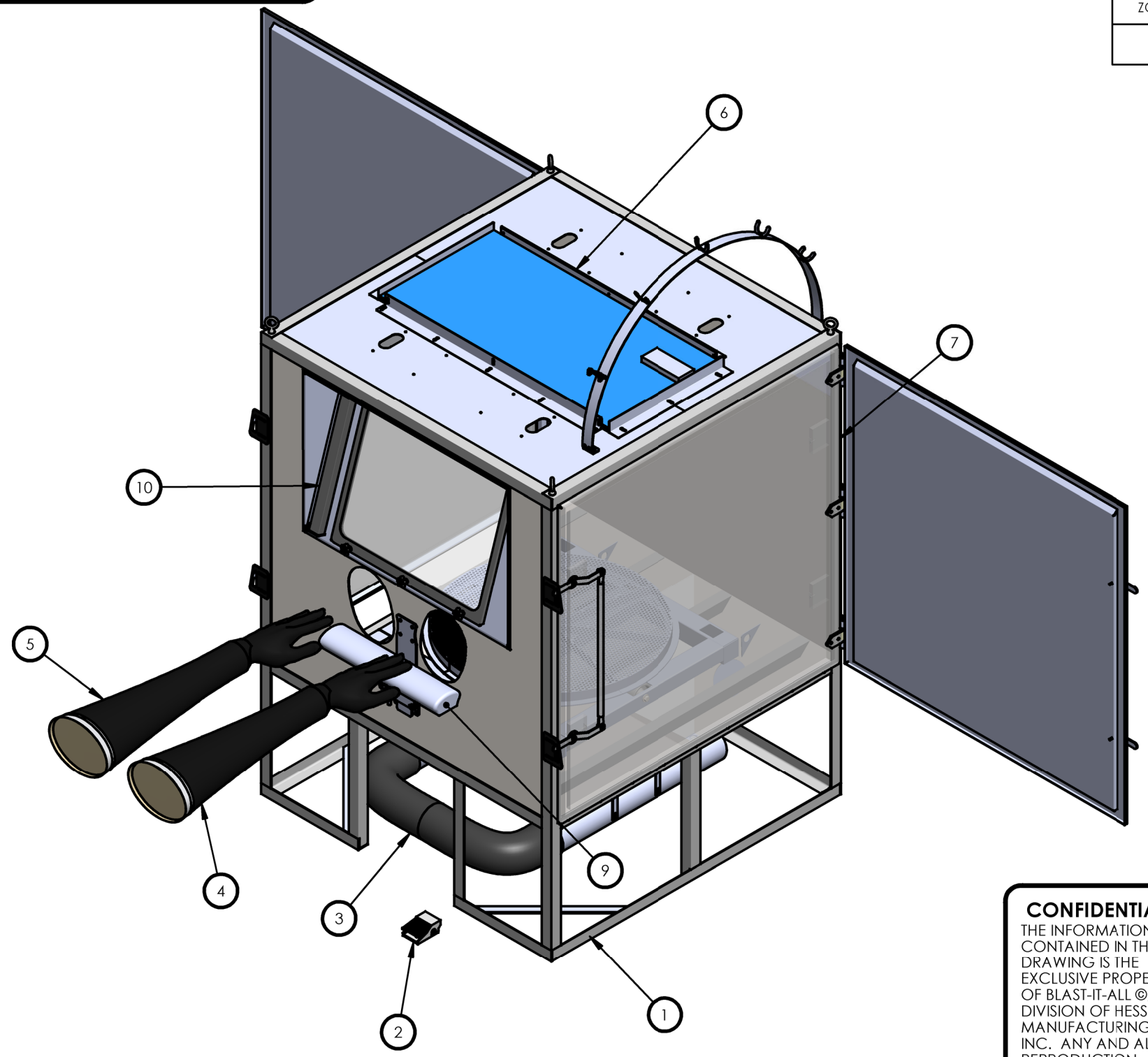

#:	QTY:	DESC/ MAT:	PRT#:
10	1	24" X 30" VISOR	B6690 WINDOW ASSY
9	1	24 IN ADJUSTABLE ARMREST	AssyTestArmrest
8	1		B11211 CART ASSY
7	2	6060 SWG DR ASSY	B6719 ASSY
6	1	2' X 4' LED LIGHT ASSY	2 X 4 LIGHT ASSY
5	1	LEFT LARGE SNAP IN GLOVE	22-079POPIN
4	1	RIGHT LARGE SNAP IN GLOVE	22-080POPIN
2	1	ELECTRIC FOOT SW	15-743
1	1	6060 CUBE STD	B6717

CONFIDENTIAL
THE INFORMATION CONTAINED IN THIS DRAWING IS THE EXCLUSIVE PROPERTY OF BLAST-IT-ALL ©, A DIVISION OF HESS MANUFACTURING, INC. ANY AND ALL REPRODUCTION, REGARDLESS OF FORM, IS STRICTLY PROHIBITED WITHOUT THE EXPRESS WRITTEN CONSENT OF HESS MANUFACTURING, INC.

BLAST-IT-ALL©
HESS MANUFACTURING, INC.
185 PIPER LANE, SALISBURY, NC 28147-7949
P: 1.800.535.2612 ■ F: 1.704.638.9311 ■ WWW.BLAST-IT-ALL.COM

TITLE / DESC: 6060 CUBE ASSY BASIC			SIZE: B
	--B6788	DWG#	DREV: A
	B6788	PART#	XXXX: 01
DWG BY: T.SHUE	DATE: 4/17/2022		SCALE: 1:18
MAT: PER DRAWING	SHT#: 1 OF 2		DWG TYPE:

--B6788

C:\Users\Todd Shue\Documents\TODD\SW_PARTS\6060-54 CUBE\6060 CUBE STD\B6788 -BASIC 6060 CUBE ASSY
LAST SAVED: Friday, December 8, 2023 10:05:39 AM

MODIFICATIONS:				
ZONE:	REV:	DESCRIPTION:	DATE:	BY :
	A	INITIAL RELEASE	6/1/2022	MTS

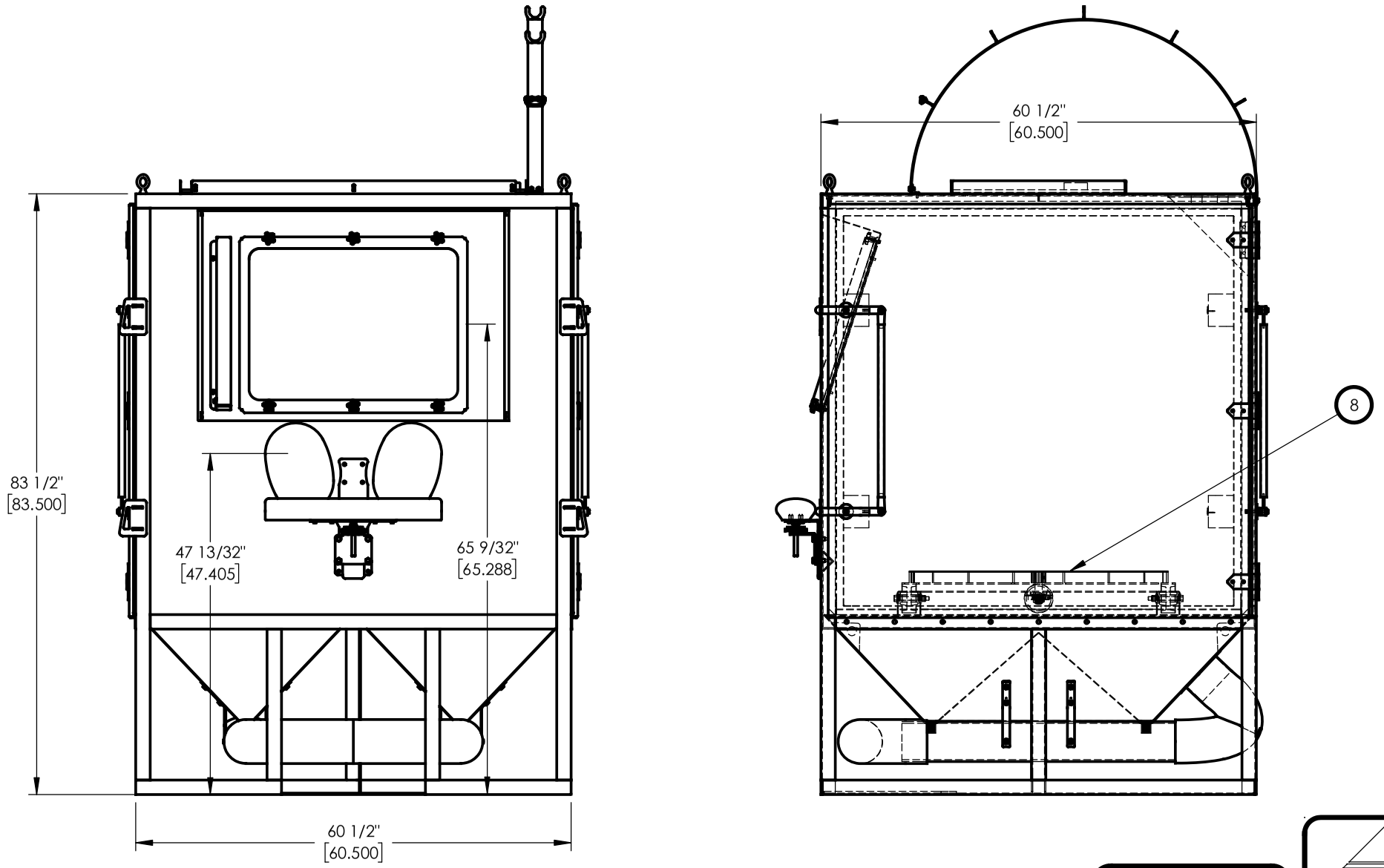

CONFIDENTIAL
THE INFORMATION CONTAINED IN THIS DRAWING IS THE EXCLUSIVE PROPERTY OF BLAST-IT-ALL ©, A DIVISION OF HESS MANUFACTURING, INC. ANY AND ALL REPRODUCTION, REGARDLESS OF FORM, IS STRICTLY PROHIBITED WITHOUT THE EXPRESS WRITTEN CONSENT OF HESS MANUFACTURING, INC.

BLAST-IT-ALL©

HESS MANUFACTURING, INC.
185 PIPER LANE, SALISBURY, NC 28147-7949
P: 1.800.535.2612 ■ F: 1.704.638.9311 ■ WWW.BLAST-IT-ALL.COM

TITLE / DESC: 6060 CUBE ASSY BASIC			SIZE: B
		--B6788 DWG#	DREV: A
		B6788 PART#	XXXX: 01
DWG BY: T.SHUE	DATE: 4/17/2022	SCALE: 1:18	
MAT: PER DRAWING	SHT#: 2 OF 2	DWG TYPE:	

--MB6690

C:\Users\Todd Shue\Documents\TODD\SW_PARTS\MB6690-01 ASSY.SLDDRW
LAST SAVED: Tuesday, November 24, 2020 2:13:21 PM

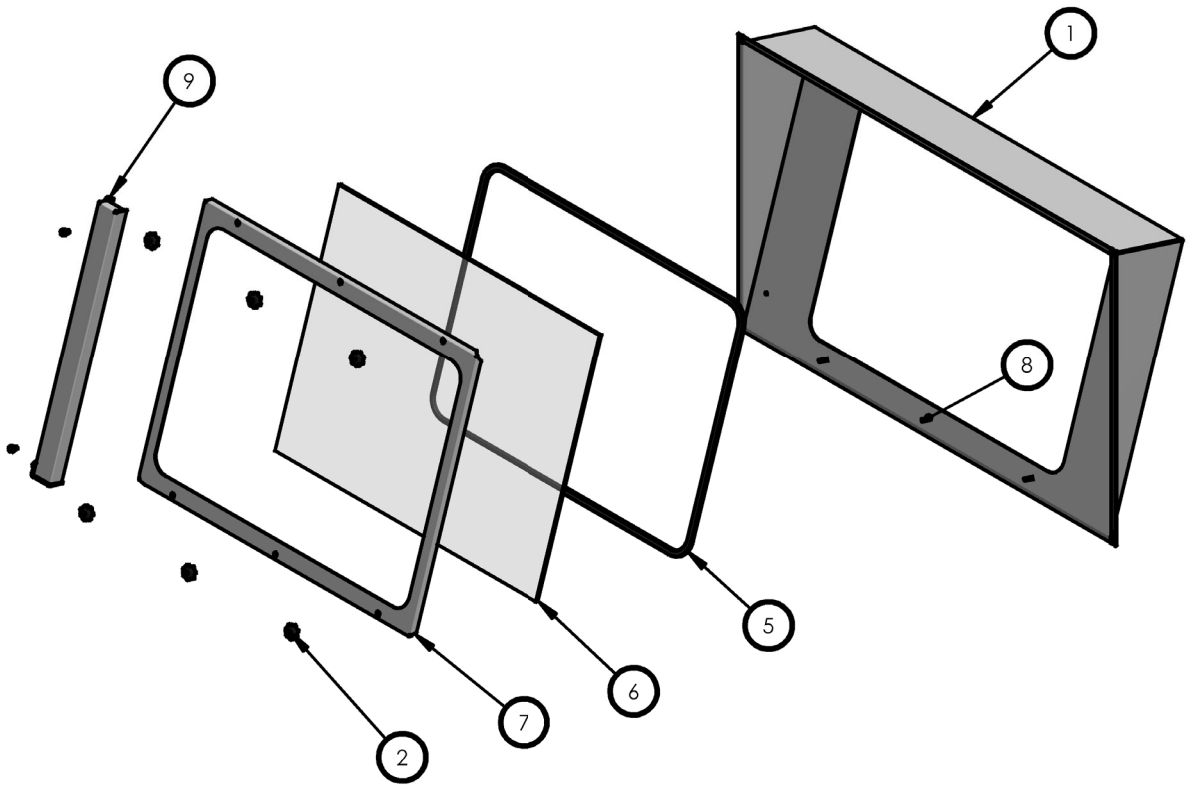

#:	QTY:	DESC/ MAT:	PRT#:
9	1	24" MYLAR DISPENSER	LWA856-A
8	6	BOLT, HEX, 0.25 X 1.00	30-148
7	1	24 X 30 WINDOW FRAME	B6695
6	1	24 X 30 LAMENATED GLASS	012458-1
5	1	24 X 30 WINDOW SEAL	23-148
2	6	5 ARM KNOB, .1/4-20	59625K330
1	1	24 X 30 VISOR BASE	B6690-01

CONFIDENTIAL

THE INFORMATION CONTAINED IN THIS DRAWING IS THE EXCLUSIVE PROPERTY OF BLAST-IT-ALL ©, A DIVISION OF HESS & ASSOCIATES, INC. ANY AND ALL REPRODUCTION, REGARDLESS OF FORM, IS STRICTLY PROHIBITED WITHOUT THE EXPRESS WRITTEN CONSENT OF HESS & ASSOC., INC.

BLAST-IT-ALL©

HESS ASSOCIATES, INC.

185 PIPER LANE, SALISBURY, NC 28147-7949
P: 1.800.535.2612 ■ F: 1.704.638.9311 ■ WWW.BLAST-IT-ALL.COM

TITLE / DESC:	24 x 30 VISOR ASSEMBY		SIZE: A
	--MB6690	DWG#	DREV: 01
	MB6690	PART#	XXXX: A
DWG BY: T.SHUE	DATE: 11/18/2020		SCALE: 1:14
MAT:	SHT#: 1 OF 1		DWG TYPE:

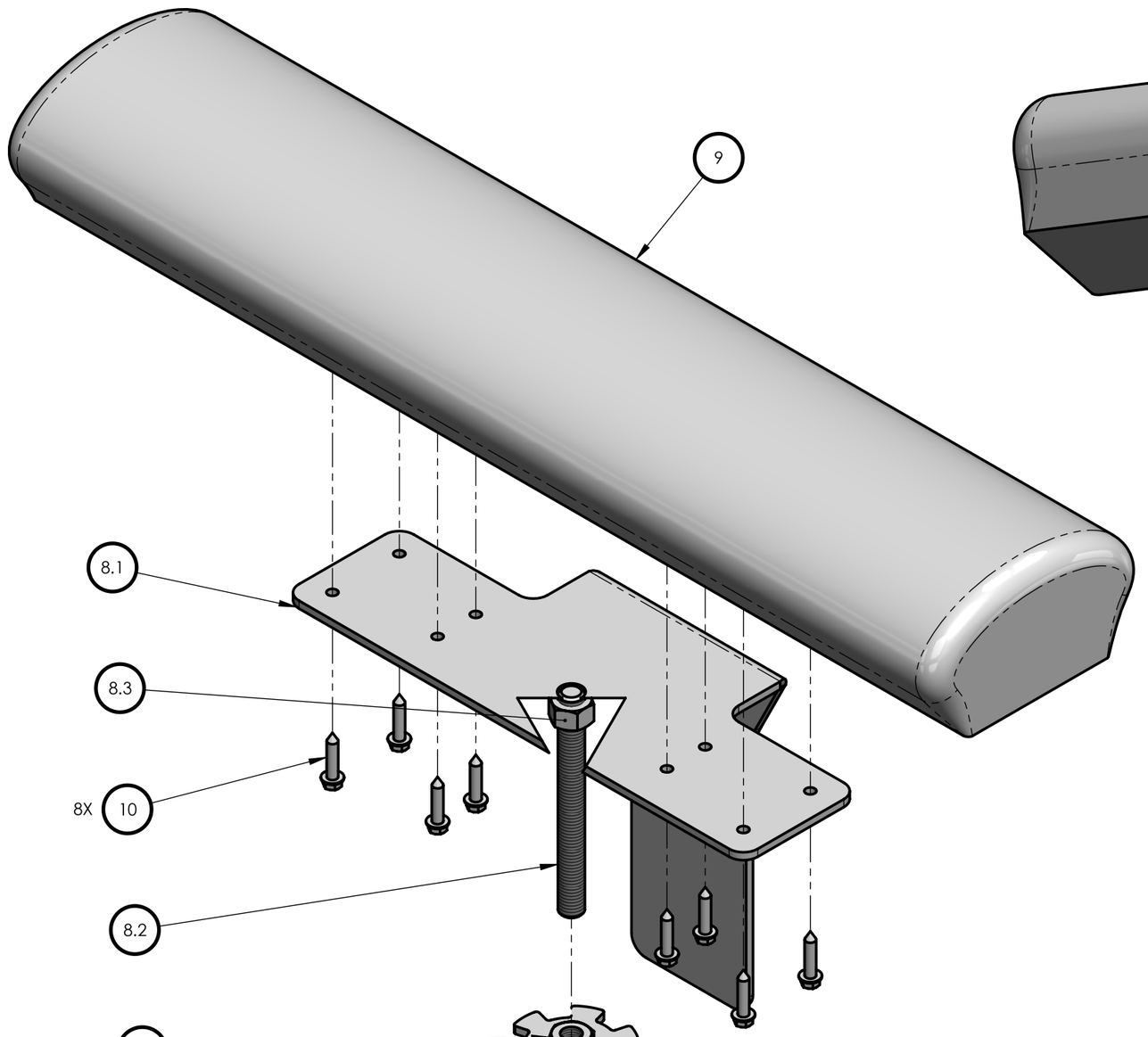

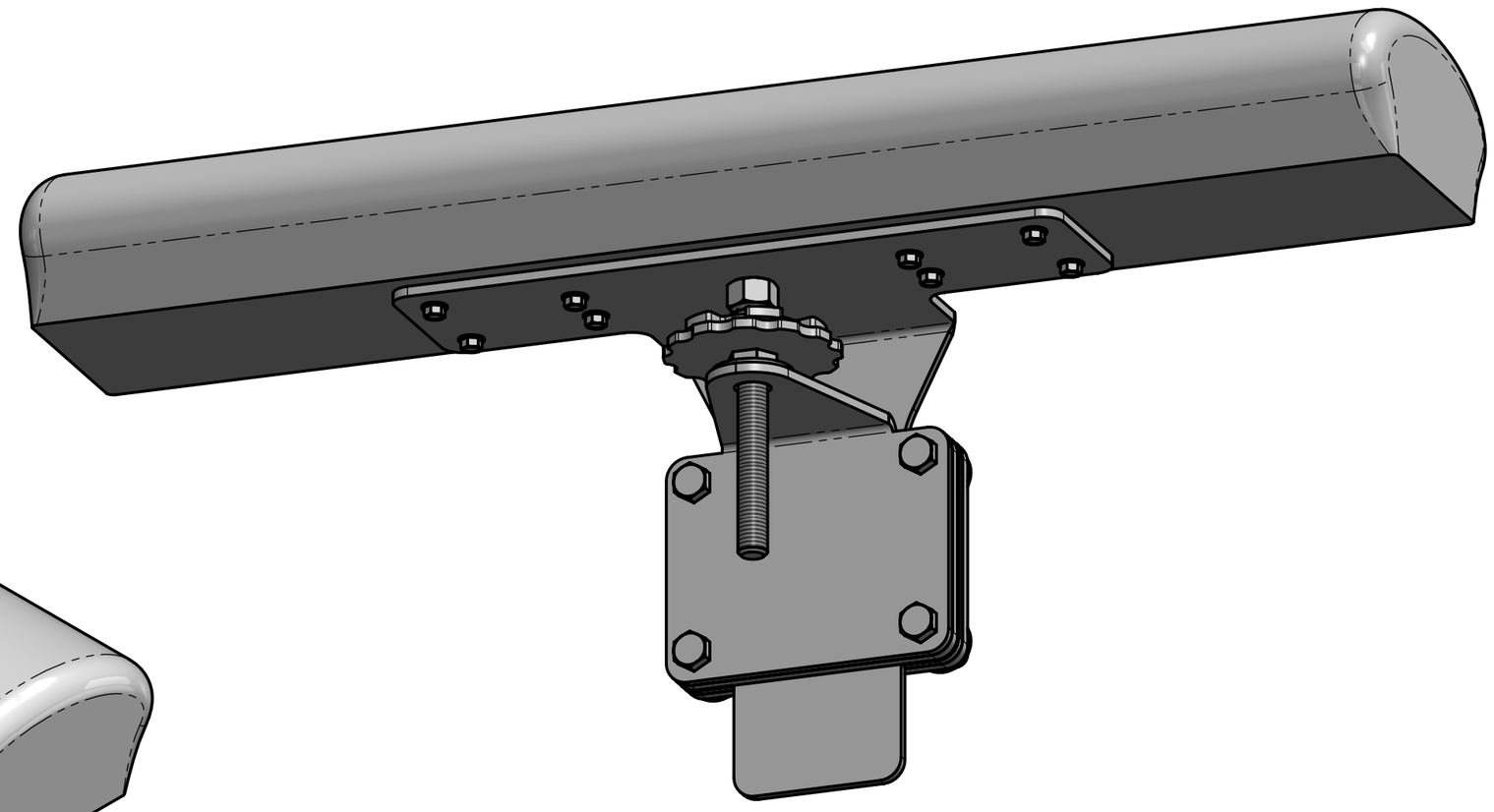

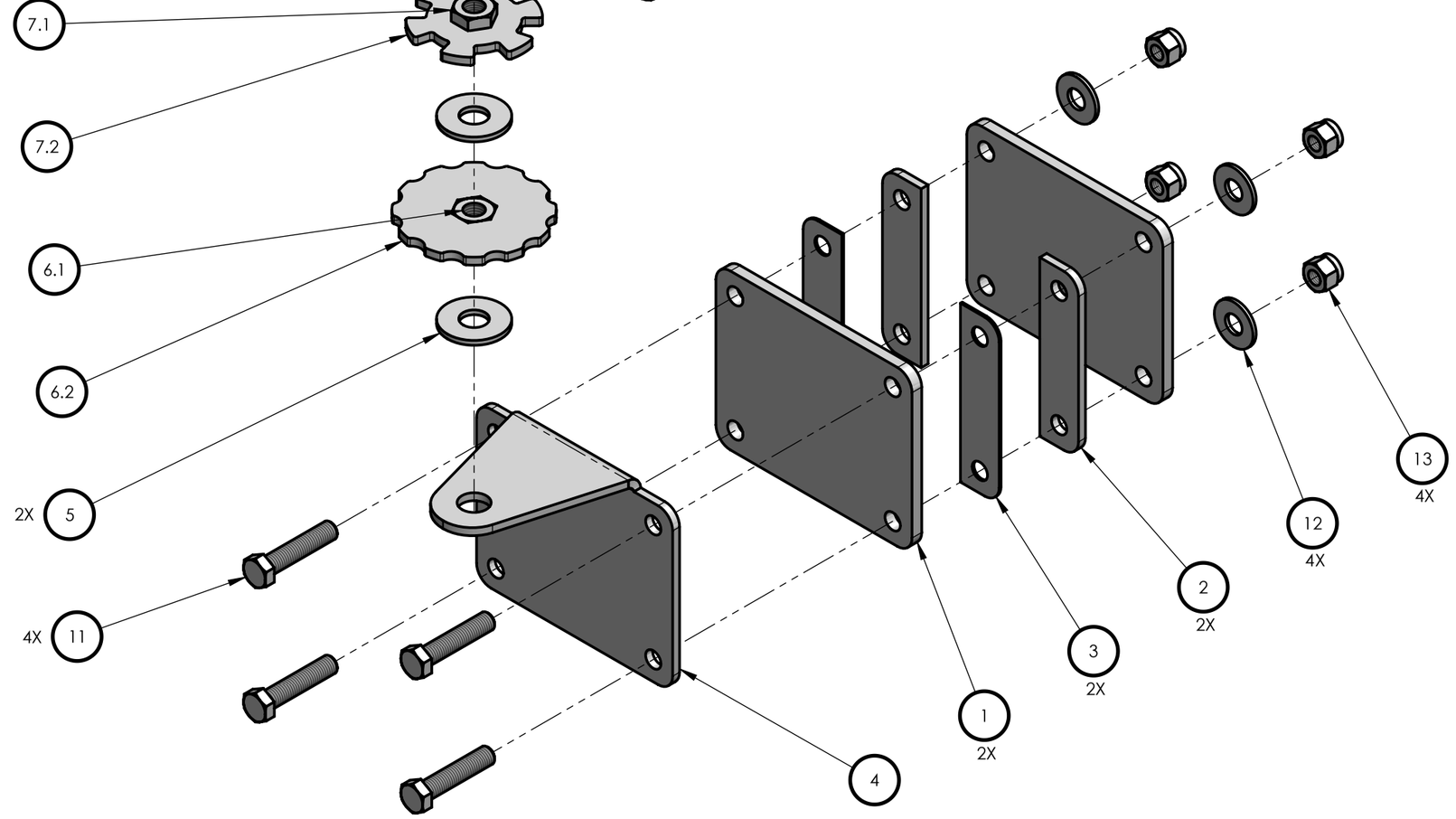

#:	QTY:	DESC/ MAT:	PRT#:	DWG#:
13	4	NUT, LOCK, NYLON, 3/8-16 * ZINC STL	30-507	---
12	4	WASHER, FLAT, USS, 3/8 * ZINC STL	30-605	---
11	4	BOLT, HHCS, 3/8-16 X 1-3/4L * ZINC STL	000435	---
10	8	SCREW, SHT-MTL, HEX-WSHR HD, #12 X 1.0L * STEEL, ZINC	011911	---
9	1	ARMREST, PADDED, 24IN * WOOD, FOAM, VINYL, STAPLES	---	WA861B-01 -
8.3	1	NUT, HEX, STD, 1/2-13 * ZINC STL	30-508	---
8.2	1	ROD, ADJUSTMENT, THREADED * 1/2-13UNC, ZINC	---	WA861B-S04 -02
8.1	1	PLATE, TEE, SLIDE * 7G HRPO	---	WA861B-S04 -01
8	1	WELD-ASSY: TEE SLIDE * SEE BOM	---	WA861B-S04 -
7.2	1	PLATE, LOCK, KNURLED * 7G HRPO	---	WA861B-S05 -01
7.1	1	NUT, HEX, STD, 1/2-13 * ZINC STL	30-508	---
7	1	WELD-ASSY: NUT, LOCK, KNURLED * SEE BOM	---	WA816B-S05 -
6.2	1	PLATE, ADJUSTMENT, KNURLED * 7G HRPO	---	WA861B-S03 -01
6.1	1	NUT, HEX, STD, 1/2-13 * ZINC STL	30-508	---
6	1	WELD-ASSY: NUT, ADJUSTMENT, KNURLED * SEE BOM	---	WA861B-S03 -
5	2	WASHER, FLAT, USS, 1/2 * ZINC STL	30-607	---
4	1	PLATE, STOP * 7G HRPO	---	WA861B-S02 -01
3	2	PLATE, STACK, 18G * 18G HRPO	---	WA861B-S01 -03
2	2	PLATE, STACK, 7G * 7G HRPO	---	WA861B-S01 -02
1	2	PLATE, UHMW * BLUE, 1/4IN	---	WA861B-S01 -01

BLAST-IT-ALL©

LARRY HESS & ASSOCIATES, INC.

185 PIPER LANE, SALISBURY, NC 28147-7949
P: 1.800.535.2612 ■ F: 1.704.638.9311 ■ WWW.BLAST-IT-ALL.COM

TITLE / DESC: MANUAL: ARMREST, ERGO, 24IN

SIZE: C

DWG#: UWA861B- -

DREV: B

PART#: ---

PREV:

DWG BY: BDP | DATE: 11/18/2014 | SCALE: 1:2.5 | SHT#: 1 OF 2

MAT: SEE BOM | DWG TYPE: EN

--B346

MODIFICATIONS:				
ZONE:	REV:	DESCRIPTION:	DATE:	BY :
	A	INITIAL RELEASE	8/4/2021	MTS

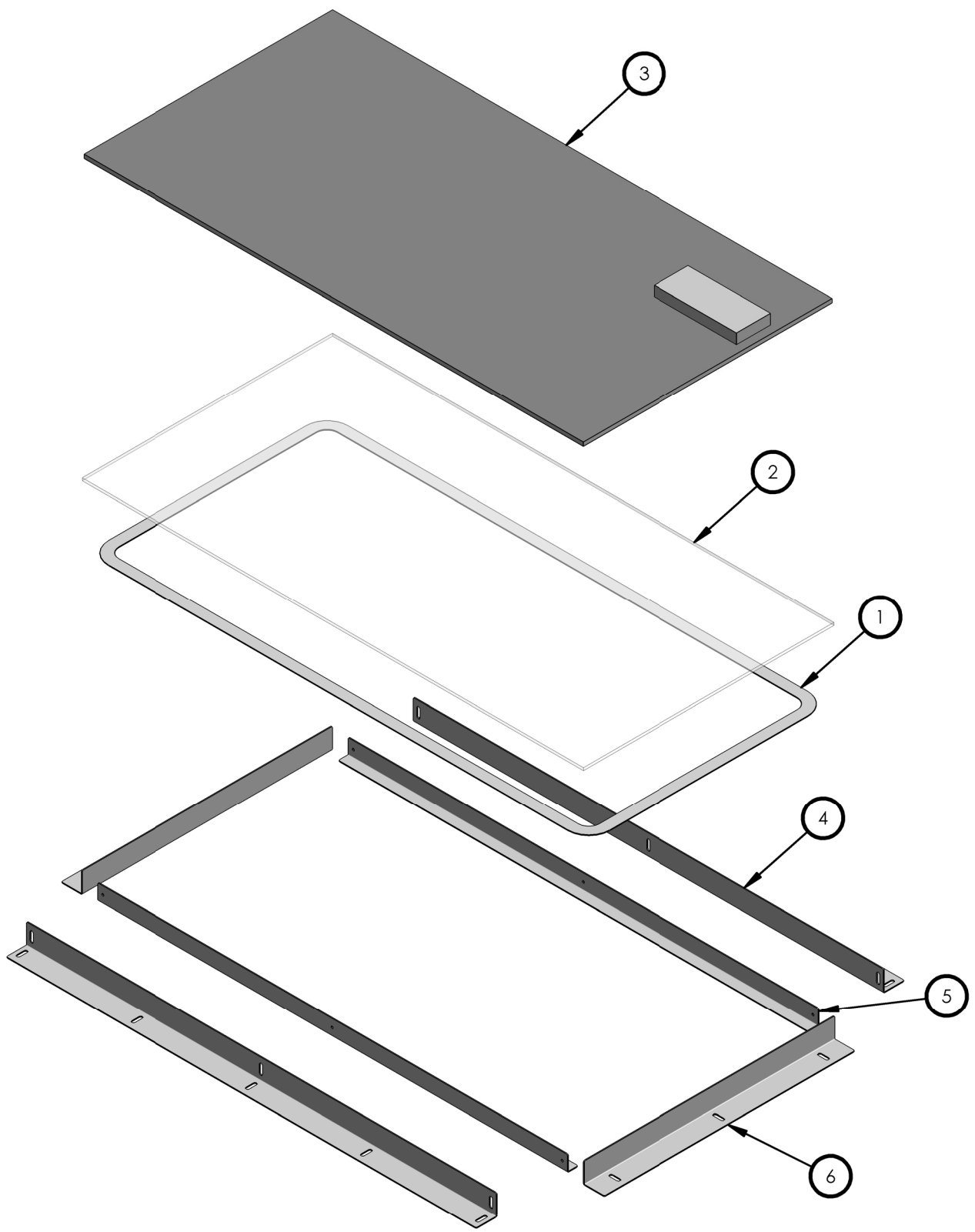

#:	QTY:	DESC/ MAT:	PRT#:
6	2		SWA33592-04
5	2		SWA33592-02
4	2		SWA33592-01
3	1		LPD-TWR24-72 2 X 4 LED LIGHT
2	1		011209 - 2 X 4 PLEXIGLASS
1	1		24-054-11 FOAM GASKET

BLAST-IT-ALL®
HESS MANUFACTURING, INC.
185 PIPER LANE, SALISBURY, NC 28147-7949
P: 1.800.535.2612 ■ F: 1.704.638.9311 ■ WWW.BLAST-IT-ALL.COM

TITLE / DESC:	2 FT X 4 FT LED LIGHT ASSY STANDARD		SIZE: B
	--B346	DWG#	DREV: 01
	B346	PART#	XXXX: A
DWG BY: T.SHUE	DATE: 8/4/2021		SCALE: 1:10
MAT: PER DRAWING	SHT#: 1 OF 1		DWG TYPE:

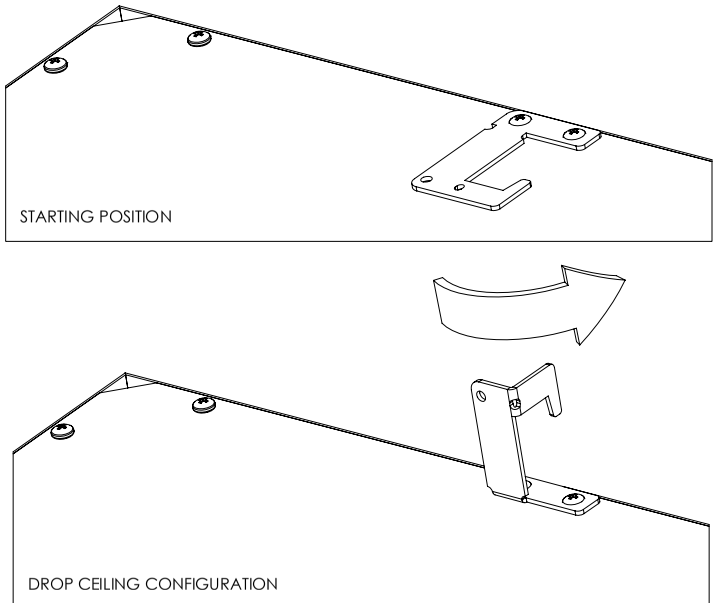

Suspension Kit Installation (LP-HKO-2)

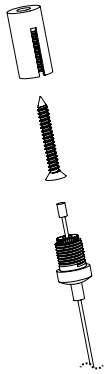

1. Mount suspension hardware to ceiling

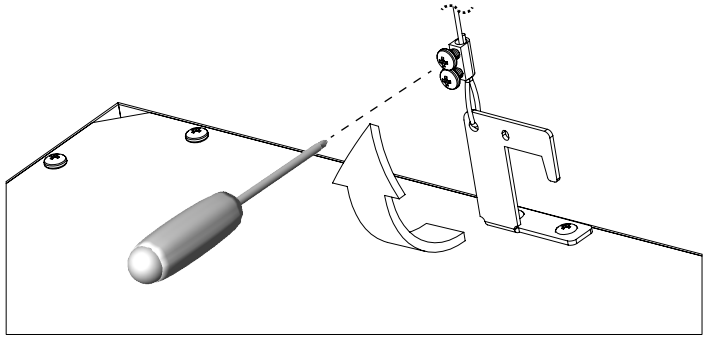

2. Hang panel from suspension cable using cable clamp

Included Parts

1 - LED Panel Ceiling Light
4 - Wire Nuts

Recommended Accessories

- Handheld Remote Control (LPD-TWHR)
- Wall-mount Controller (LPD-TWWR)
- Optional Suspension Kit (LP-HKO-2)
- Surface Mount Kit (LP-22-SMK, LP-24-SMK)

Safety and Notes

- Product should be installed by a certified electrician in accordance with applicable national, state, and local building and electrical codes.
- To reduce the risk of electric shock, ensure that the main power source and circuit breakers are switched off before performing any installation or wiring procedures.
- Avoid looking directly into the light when illuminated.
- Failure to properly support the fixture may result in damage or injury, for which the manufacturer does not assume responsibility. A safety cable is not included, but it is recommended that one be connected to grid clip during installation.

Recessed Installation

1. Turn off power and remove existing troffer light or ceiling tile.
2. Open driver box and remove knockout(s) on driver box. Make electrical connections inside of driver box as shown in FIG 1. Reinstall junction box lid.

FIG 1

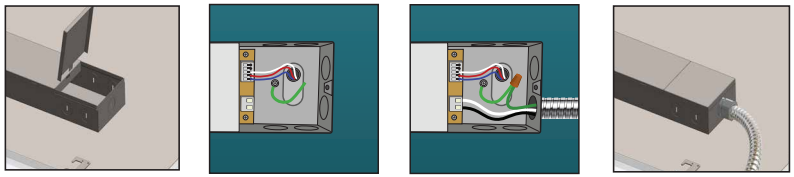

Controllers

ON OFF	ON Turn on OFF Turn off
OFF	Turn off the light to save the current color temperature then turn on the light, the last saved color temperature will be displayed by default.
ID	**Matching code for light** Long pressing the 'ID' button will keep the controller's indicator on, then turn on the light and release the 'ID' button after the light flashes, matching code complete. Matching code for several lights simultaneously is available.
ID + ▼	**Release the code and disconnect light from remote controller** Press the botton ID + ▼ together, then turn on the light, the light will flash to finish releasing the code on the lights.
1 2 3 4	**Group selecting button** Grouping lights (matching code process needs to be completed first). Turn off the lights, continue pressing the group selection button for 3s, then turn on the lights, the lights will flash to finish grouping.
Save	**Save button** Long pressing (3-5 seconds) the button "SAVE" until the light goes out, the current brightness and color temperature are automatically saved. Turn off lights then turn on, the last saved brightness and color temperature will be displayed by default.
ALL	**All Groups are selected**
25% 25% brightness	75% 75% brightness
50% 50% brightness	100% 100% brightness
▲ Increase brightness ▼ Decrease brightness	◀ Decrease color temperature ▶ Increase color temperature

ON OFF	ON Turn on OFF Turn off
ON	Long pressing (6-9 seconds) the button "ON" until the light goes out, the current brightness and color temperature are automatically saved. Turn off lights then turn on, the last saved brightness and color temperature will be displayed by default.
OFF	Turn off the light to save the current color temperature then turn on the light, the last saved color temperature will be displayed by default.
ON + OFF	**Light code combination matching button** Pressing the 'ON + OFF' buttons simultaneously will keep the remote controller's indicator on, turn on the light and release the buttons after the light has been on for 2s completing the matching process. Matching code for several lights together is available. If you need to use both hand-hold controller and wall controller for the same light, please don't use this function, directly use the following copy function.
CCT	Press the 'CCT' button, the color temperature will cycle between 3000k/3500k/4000k/5000k.After shutting down/turning off the current color temperature will be saved.

Wall Controller and Handheld Controller Dual Use

If using both the handheld controller and wall-mount controller, the wall controller can copy some of the functions of the hand-hold controller by holding the following buttons simultaneously for a few seconds until indicator light turns solid.

NO.	Grouping	Hand-hold controller	Wall-type controller
1	1	1 + ID	ON+CCT
2	2	2 + ID	ON+CCT
3	3	3 + ID	ON+CCT
4	4	4 + ID	ON+CCT
5	All	ID	ON+CCT

Wiring Diagrams

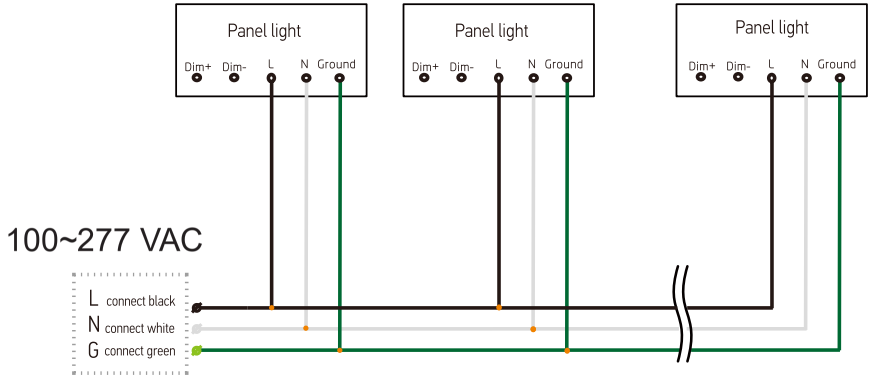

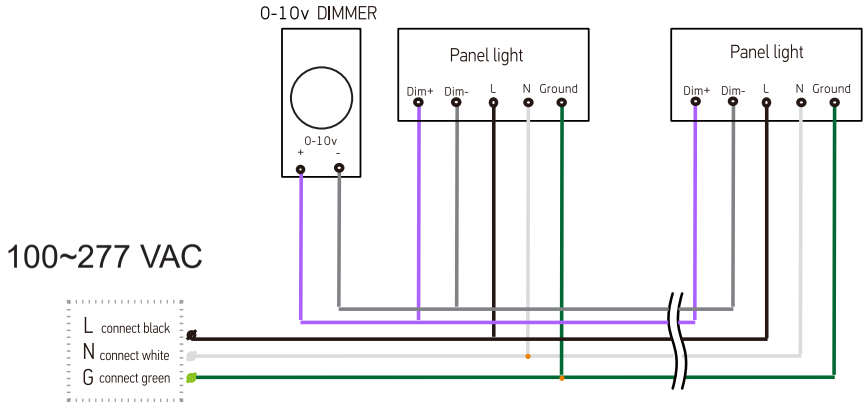

--B6719

C:\Users\Todd Shue\Documents\TODD\SW_PARTS\6060-54 CUBE\6060 CUBE STD\B6719 - 6060 CUBE SWG DR\B6719 6060 CUBE SWG DR
LAST SAVED: Wednesday, October 19, 2022 11:21:26 AM

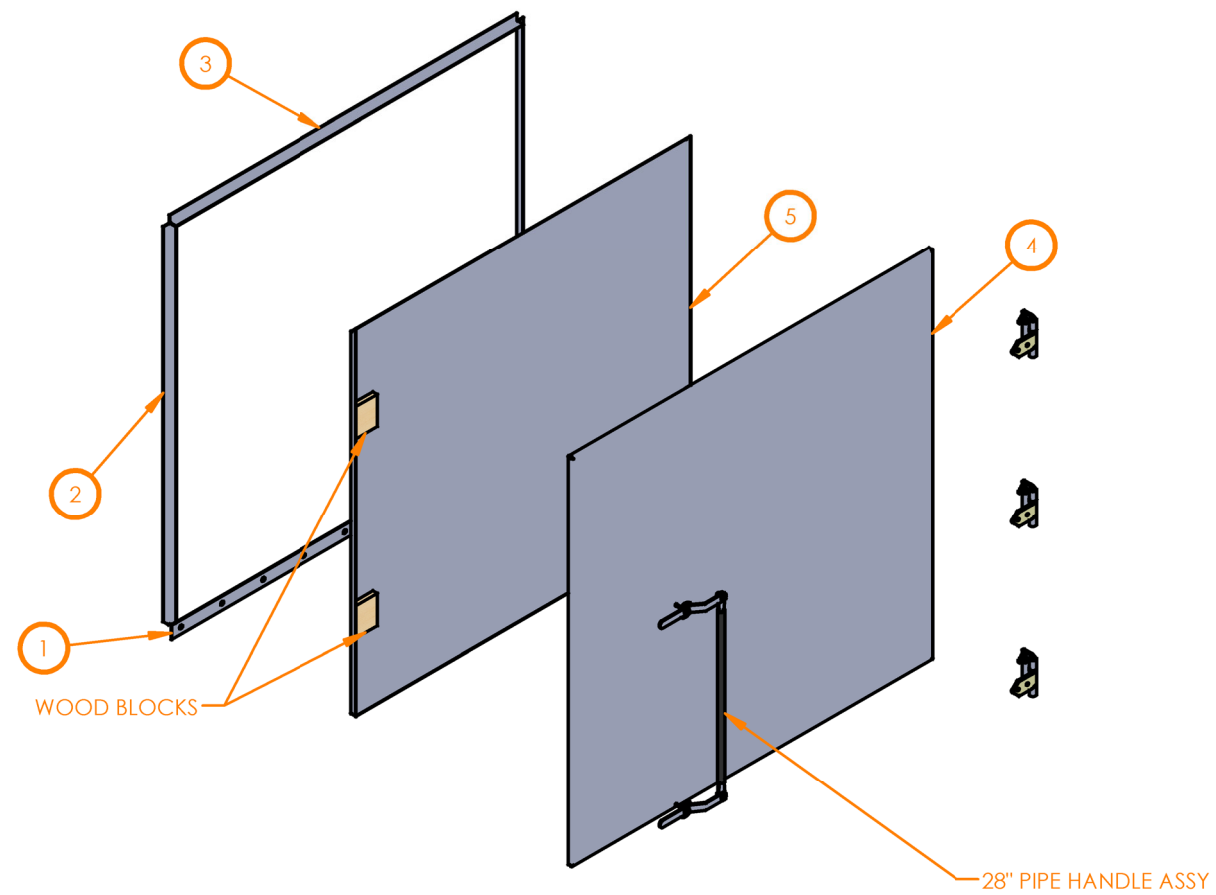

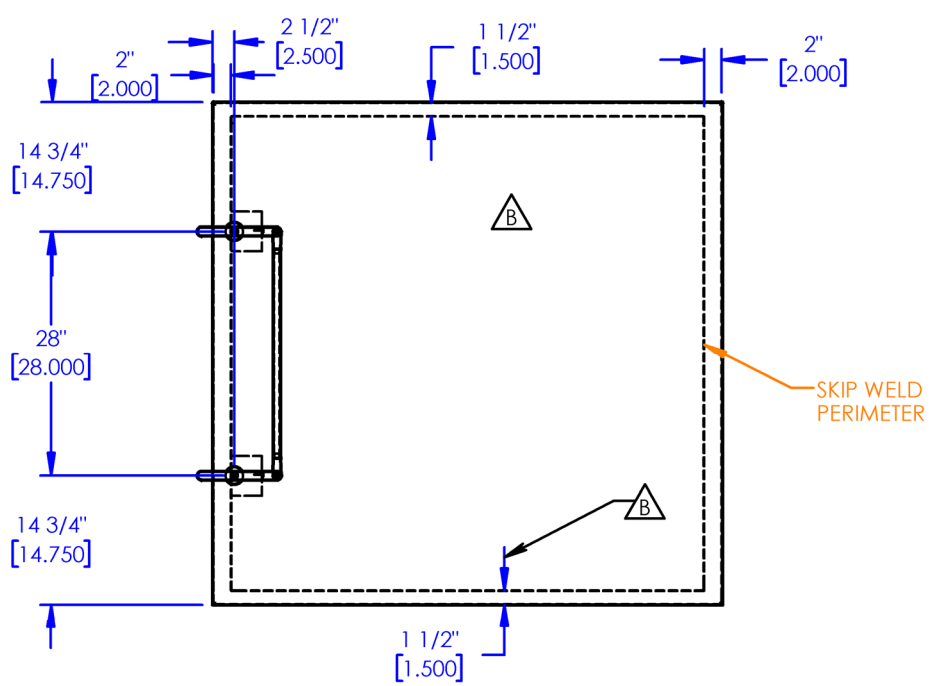

MODIFICATIONS:

ZONE:	REV:	DESCRIPTION:	DATE:	BY :
A6, B7	B	INCREASED DIM BY 0.25"	7/2/2021	MTS

?

#:	QTY:	DESC/ MAT:	PRT#:
6	5	HD HINGE	007150
5	1	6060 SWG DR LINER	B6719-05
4	1	6060 SWG DR FRNT	B6719-04
3	1	TOP KNIFE EDGE	B6719-03
2	2	SIDE KNIFE EDGE	B6719-02
1	1	BOTTOM KNIFE EDGE	B6719-01

CONFIDENTIAL
THE INFORMATION CONTAINED IN THIS DRAWING IS THE EXCLUSIVE PROPERTY OF BLAST-IT-ALL ©, A DIVISION OF HESS MANUFACTURING, INC. ANY AND ALL REPRODUCTION, REGARDLESS OF FORM, IS STRICTLY PROHIBITED WITHOUT THE EXPRESS WRITTEN CONSENT OF HESS MANUFACTURING, INC.

BLAST-IT-ALL©

HESS MANUFACTURING, INC.
185 PIPER LANE, SALISBURY, NC 28147-7949
P: 1.800.535.2612 ■ F: 1.704.638.9311 ■ WWW.BLAST-IT-ALL.COM

TITLE / DESC: 6060 CUBE SWG DR
STANDARD

SIZE: B
DWG#: --B6719
DREV: 02
PART#: B6719
XXXX: A

DWG BY: T.SHUE	DATE: 7/2/2021	SCALE: 1:20
MAT: PER DRAWING	SHT#: 2 OF 8	DWG TYPE:

A36066

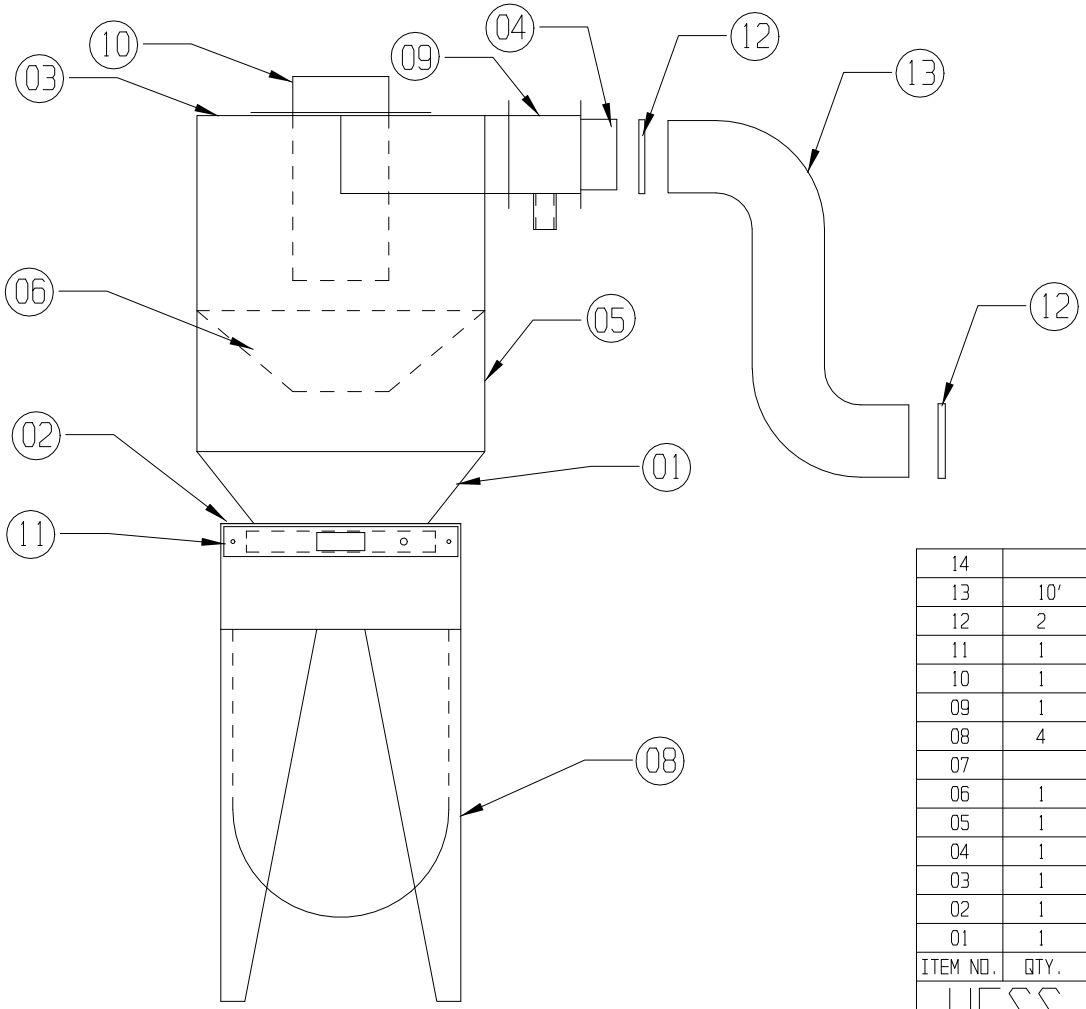

*NOTE: HEIGHT 77-1/2" TALL

ITEM NO.	QTY.	DESCRIPTION	DWG.NO./ MATERIAL
14		CUT SHEET	A36067
13	10'	FLEX HOSE (6")	19-096
12	2	CLAMP	21-035
11	1	TRASH SCREEN	A673
10	1	TOP OUTLET	A1209
09	1	PURGE ADAPTOR	B1125-1
08	4	LEGS (31")	A1124-3
07			
06	1	STD. 900 INNER CONE	A1206-1
05	1	STD. 900 BODY	A1203-2
04	1	STD. 6" INLET	A12767
03	1	STD. 900 TOP	A1211-1
02	1	SUMP FLANGE	A1125-1
01	1	BOTTOM CONE	A1226

HESS MANUFACTURING, INC.
SALISBURY, NORTH CAROLINA

NO.	REVISION	BY	DATE	NO.	REVISION	BY	DATE

DESCRIPTION: 900 REC. W/PRESSURE POT

MATERIAL: PER DWG.

DRAWN BY:	DATE:	SCALE:	JOB NO:
D. CLINTON	10/27/99	1/16"= 1"	
CHK'D BY:	DATE:	FRACTIONAL: DECIMAL: ANGULAR:	NEXT ASS'Y.:

DRAWING NO.: A36066

A673-A

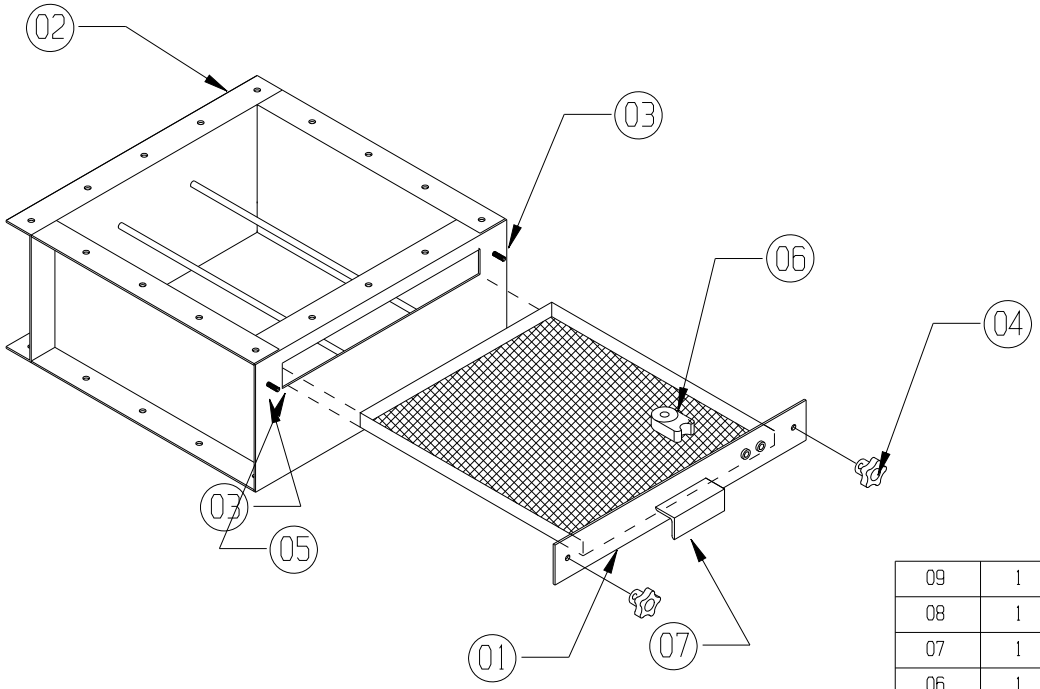

ITEM NO.	QTY.	DESCRIPTION	DWG.NO./ MATERIAL
09	1	REPLACEMENT DRAWER (3/8" HOLES)	010581-2
08	1	REPLACEMENT DRAWER (1/4" HOLES)	010581-1
07	1	REPLACEMENT DRAWER (3/16" HOLES)	010581
06	1	VIBRATOR (OPTIONAL)	16-919
05	3 FT.	1/8" x 3/4" GASKET	24-021
04	2	PLASTIC FIVE ARM KNOB	59625K33
03	2	1/4" SELF TAPPER x 1" LONG	30-148
02	1	TRASH SCREEN BOX ASS'Y.	A673
01	1	DRAWER ASS'Y.	A270

HESS MANUFACTURING, INC.
SALISBURY NORTH CAROLINA

DESCRIPTION: TRASH SCREEN ASM. 010580

MATERIAL:

DRAWN BY:	DATE:	SCALE:	JOB NO:
DEC	6/14/99	3/32"= 1"	STD.
CHK'D BY:	DATE:	FRACTIONAL: DECIMAL: ANGULAR:	NEXT ASS'Y.:

DRAWING NO.: A673-A

REV.	DESCRIPTION	BY	DATE
#1	ADD 3/8" DRAWER	LJF	12/09/08

CONFIDENTIAL

MWA698B- -

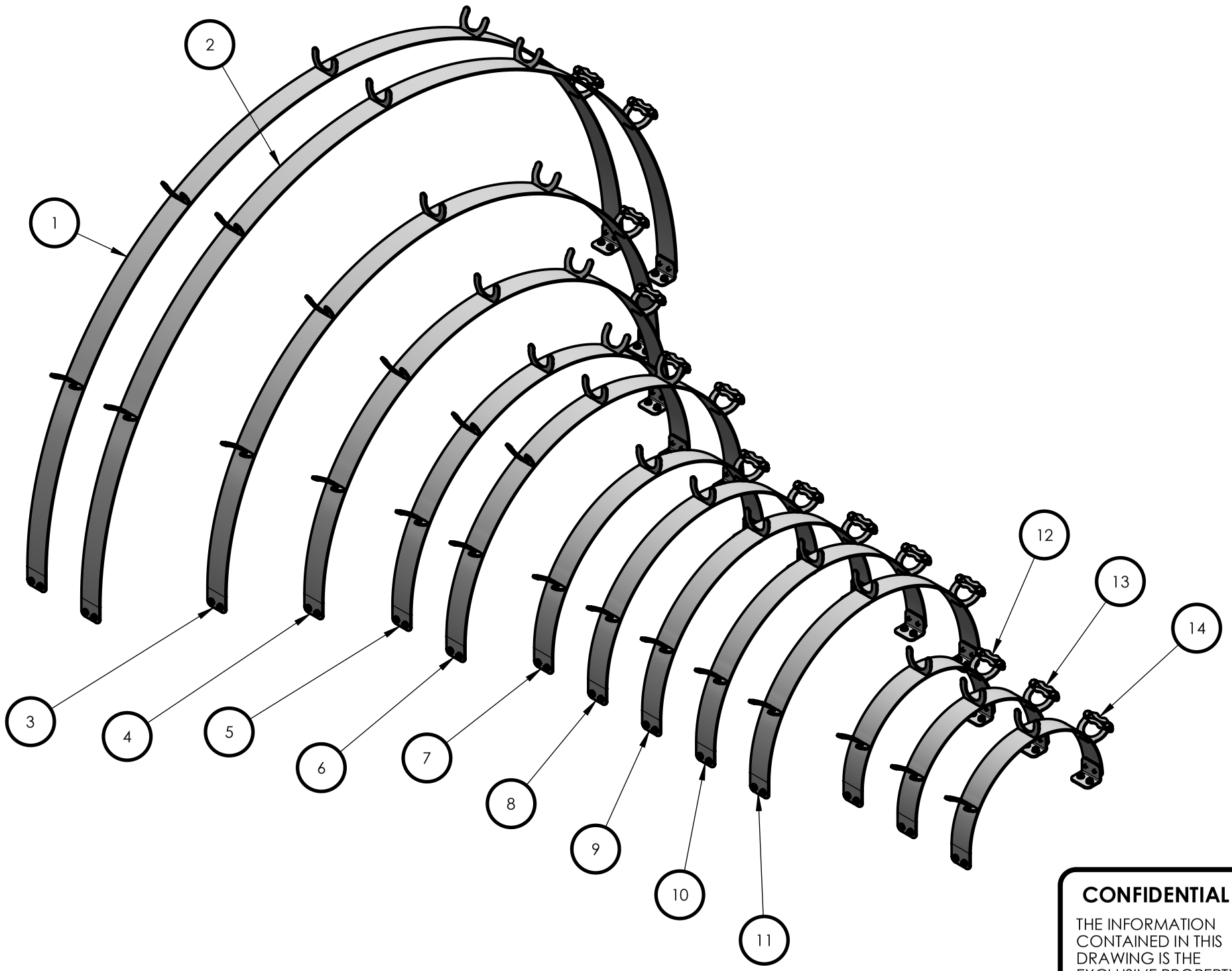

#:	QTY.	DESC/ MAT:	PRT#:	DWG#:
14	1	ASSY: SUPPORT, HOSE, BLAST, 24IN, BIA4426 * SEE BOM	WA698B-01	---
13	1	ASSY: SUPPORT, HOSE, BLAST, 24IN, LB4024 * SEE BOM	WA698B-01	---
12	1	ASSY: SUPPORT, HOSE, BLAST, 24IN, M4436 * SEE BOM	WA698B-01	---
11	1	ASSY: SUPPORT, HOSE, BLAST, 36IN, 4836-SP * SEE BOM	WA698B-02	---
10	1	ASSY: SUPPORT, HOSE, BLAST, 36IN, 6036-SP * SEE BOM	WA698B-02	---
9	1	ASSY: SUPPORT, HOSE, BLAST, 36IN, ABC3636 * SEE BOM	WA698B-02	---
8	1	ASSY: SUPPORT, HOSE, BLAST, 36IN, BIA4836 * SEE BOM	WA698B-02	---
7	1	ASSY: SUPPORT, HOSE, BLAST, 42IN, M5542 * SEE BOM	WA698B-02	---
6	1	ASSY: SUPPORT, HOSE, BLAST, 48IN, BIA4848 * SEE BOM	WA698B-04	---
5	1	ASSY: SUPPORT, HOSE, BLAST, 48IN, BIA6048 * SEE BOM	WA698B-04	---
4	1	ASSY: SUPPORT, HOSE, BLAST, 60IN, BIA6060 * SEE BOM	WA698B-06	---
3	1	ASSY: SUPPORT, HOSE, BLAST, 60IN, BIA6060-CUBE * SEE BOM	WA698B-08	---
2	1	ASSY: SUPPORT, HOSE, BLAST, 72IN, BIA7272-CUBE * SEE BOM	WA698B-09	---
1	1	ASSY: SUPPORT, HOSE, BLAST, 84IN, BIA8484-CUBE * SEE BOM	UNKNOWN	---

LARRY HESS & ASSOCIATES, INC.

BLAST-IT-ALL©

185 PIPER LANE, SALISBURY, NC 28147-7949

P: 1.800.535.2612 ■ F: 1.704.638.9311 ■ WWW.BLAST-IT-ALL.COM

TITLE / DESC: MANUAL: SUPPORTS, HOSE, BLAST,... ...ALL

SIZE: B

DWG#: MWA698B- -

DREV: B

PART#: ---

PREV:

DWG BY: BDP	DATE: 12/31/2014	SCALE: 1:10	SHT#: 1 OF 1
MAT: SEE BOM			DWG TYPE: EN

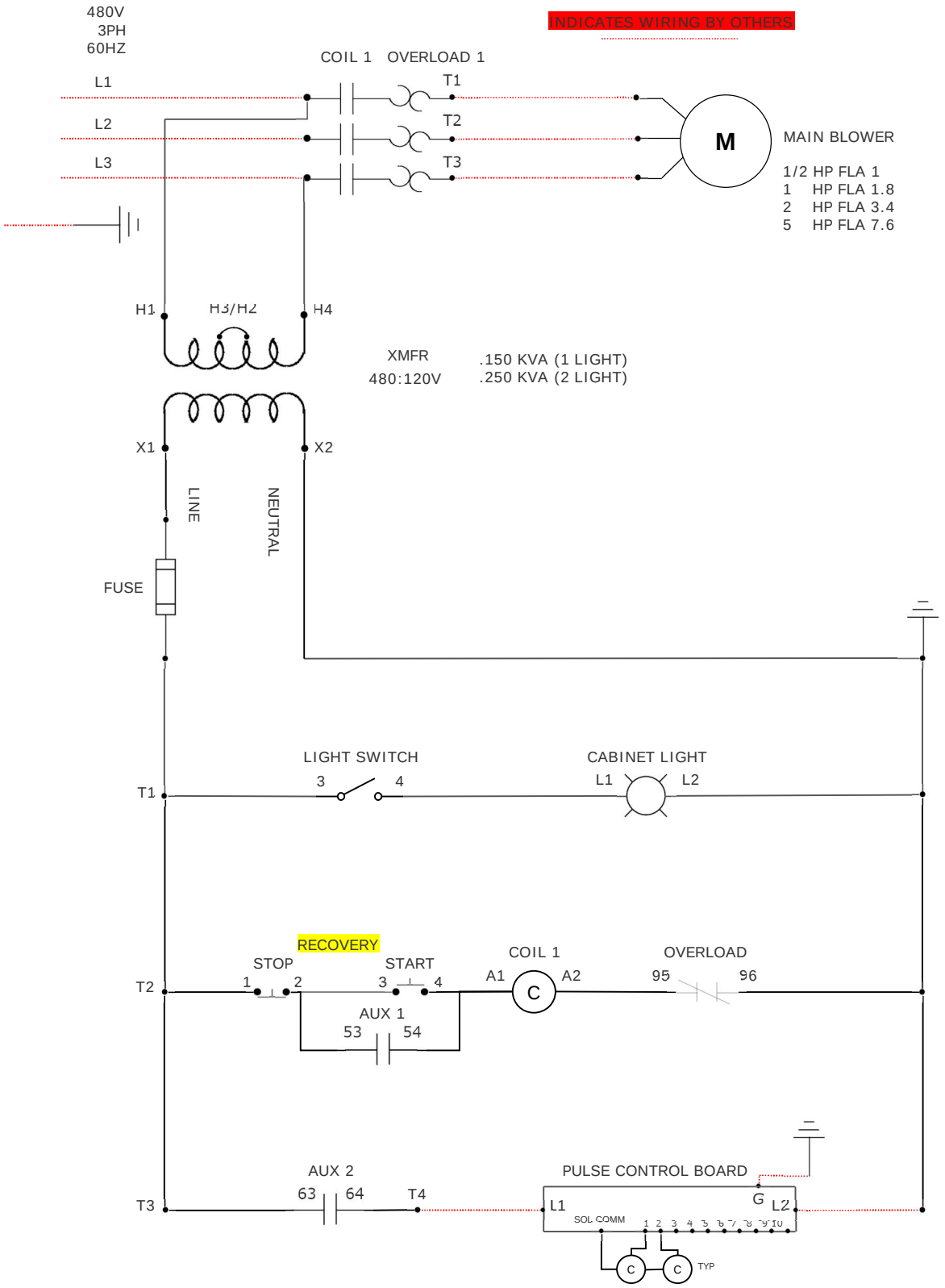

Name:	**480 VOLT 3 PHASE CONTROL BOX**	Drawing:	Project:	Drawn: JRL	Notes: ALL NEUTRALS JUMP MOTOR/DC WIRED BY OTHERS	**HESS MANUFACTURING INC. 185 PIPER LN SALISBURY, NC 28147**
Cat:	**ELECTRICAL**	Scale: NTS	Date: JAN 2023	Rev: B		

PRESSURE BLAST DATA

PRESSURE NOZZLE AIR * MEDIA * POWER DATA:						
NOZZLE: INCHES:	**BLAST PRESSURE (PSI):**					**REQUIREMENTS:**
	60	**70**	**80**	**90**	**100**	
#3 3/16"	31.54	35.85	40.08	44.15	49.00	AIR (CFM)
	171	**196**	**216**	**238**	**264**	**MEDIA (LBS / HR)**
	7	8	9	10	11	POWER (HP)
#4 1/4"	**56.11**	**63.66**	**71.13**	**78.68**	**85.00**	**AIR (CFM)**
	312	354	408	448	494	MEDIA (LBS / HR)
	12	**14**	**16**	**17**	**18**	**POWER (HP)**
#5 5/16"	91.13	103.63	115.66	127.74	140.00	AIR (CFM)
	534	**604**	**672**	**740**	**812**	**MEDIA (LBS / HR)**
	20	23	26	28	31	POWER (HP)
#6 3/8"	**126.16**	**143.59**	**160.19**	**176.79**	**194.00**	**AIR (CFM)**
	764	864	960	1052	1152	MEDIA (LBS / HR)
	28	**32**	**36**	**39**	**44**	**POWER (HP)**

PRESSURE BLAST DATA

PRESSURE NOZZLE AIR * MEDIA * POWER DATA:						
NOZZLE: INCHES:	**BLAST PRESSURE (PSI):**					**REQUIREMENTS:**
	60	**70**	**80**	**90**	**100**	
#3 3/16"	31.54	35.85	40.08	44.15	49.00	AIR (CFM)
	171	**196**	**216**	**238**	**264**	**MEDIA (LBS / HR)**
	7	8	9	10	11	POWER (HP)
#4 1/4"	**56.11**	**63.66**	**71.13**	**78.68**	**85.00**	**AIR (CFM)**
	312	354	408	448	494	MEDIA (LBS / HR)
	12	**14**	**16**	**17**	**18**	**POWER (HP)**
#5 5/16"	91.13	103.63	115.66	127.74	140.00	AIR (CFM)
	534	**604**	**672**	**740**	**812**	**MEDIA (LBS / HR)**
	20	23	26	28	31	POWER (HP)
#6 3/8"	**126.16**	**143.59**	**160.19**	**176.79**	**194.00**	**AIR (CFM)**
	764	864	960	1052	1152	MEDIA (LBS / HR)
	28	**32**	**36**	**39**	**44**	**POWER (HP)**

BLAST-IT-ALL®

A Division of Hess Manufacturing, Inc.
185 Piper Lane Salisbury, NC 28145
P O Box 1615 Salisbury, NC 28147
Toll Free 800-535-2612
Fax 704-638-9311

`

Hess Manufacturing, Inc. Warrants to the original purchaser of the merchandise sold, to be free from defects in material or workmanship under normal use and service for a period of (**5**) years. **This warranty does not cover typical wear items.** Upon prompt notification by the purchaser, to Hess Manufacturing, Inc, components that are determined by Hess Manufacturing, Inc to be defective will be repaired or replaced at no additional charge F.O.B. our factory.

This warranty requires the following:

1) **A completed and returned Warranty Registration card.**
2) **Use of Genuine Blast-it-all® OEM replacement parts purchased through Hess Manufacturing, Inc, Blast-it-all® to include common wear items. For the entire period of the warranty.**
3) **Failures to provide proof of the purchase of Blast-it-all® OEM wear Items voids warranty.**

Manufacturer shall have the right to inspect prior replacing all merchandise in question.

Manufacturer shall not be required to pay any removal or installation charges whatsoever

Manufacturer shall not be held liable for prospective profits, special or consequential damages, nor shall any recovery of any kind against manufacturer be greater in amount the cost of the repairs of defects in workmanship

This warranty does not apply to damage caused by accidents, damage occurring during transit, alterations by unauthorized personnel, abuse or damage by flood, fire or acts of God, nor by artificially generated electric currents or any other cause whatsoever except defects in material or factory workmanship.

In ALL cases, defective parts must be returned to Hess Manufacturing, Inc, before credit is issued.

This warranty is in lieu of all other warranties expressed, written or implied and releases Hess Manufacturing, Inc of all other obligations and liabilities whatsoever. This warranty neither assumes nor authorizes any person any obligation other than those specified by this warranty.

DO NOT USE SAND! SAND WILL CAUSE SILICA DUST, WHICH IS THE CAUSE OF SILICOSIS DISEASE, A CONDITION OF MASSIVE FIBROSIS OF THE LUNGS. THIS STATEMENT INDICATES POTENTIAL PERSONEL HAZARD. FAILURE TO COMPLY WITH THESE INSTRUCTIONS MAY RESULT IN PERSONAL INJURY.